Specification Sheet

الخزف السعودي
Saudi Ceramics



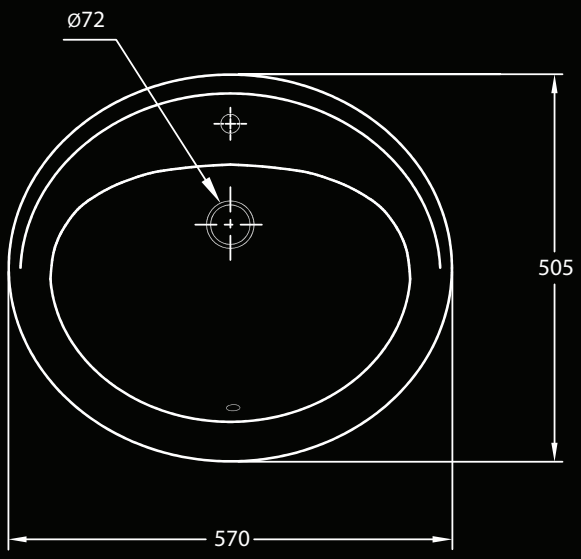

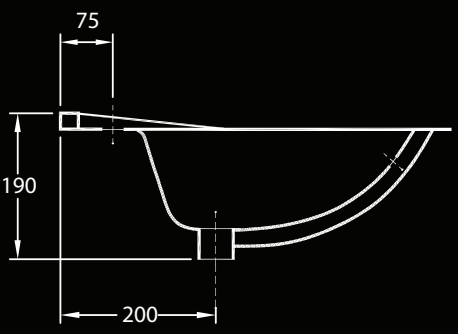

VANITY 300
120290110010020
WASHBASIN