Specification Sheet

الخزف السعودي
Saudi Ceramics



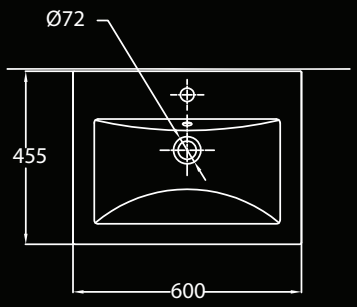

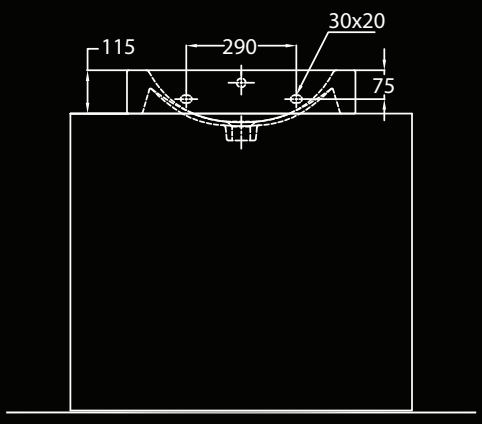

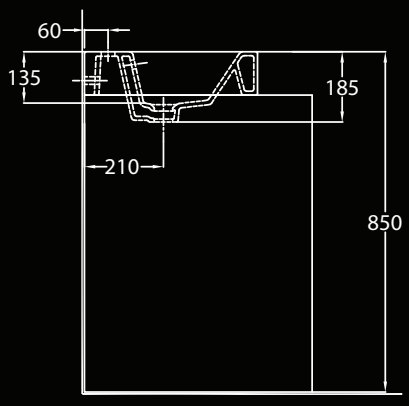

BODOR 4000
121010119010030
OVER COUNTER WASH BASIN 60 CM - WHITE