Specification Sheet

الخزف السعودي
Saudi Ceramics



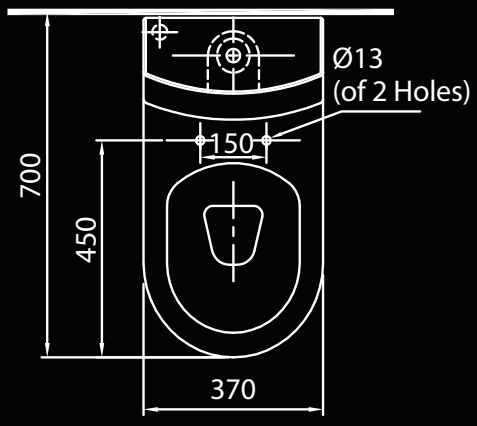

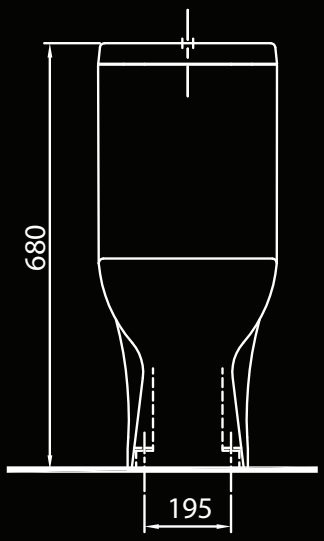

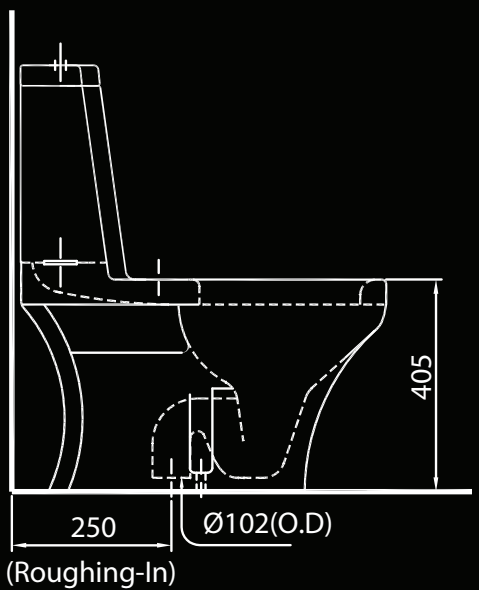

PARIS
121210251010010
WATER CLOSET