Specification Sheet

الخزف السعودي
Saudi Ceramics



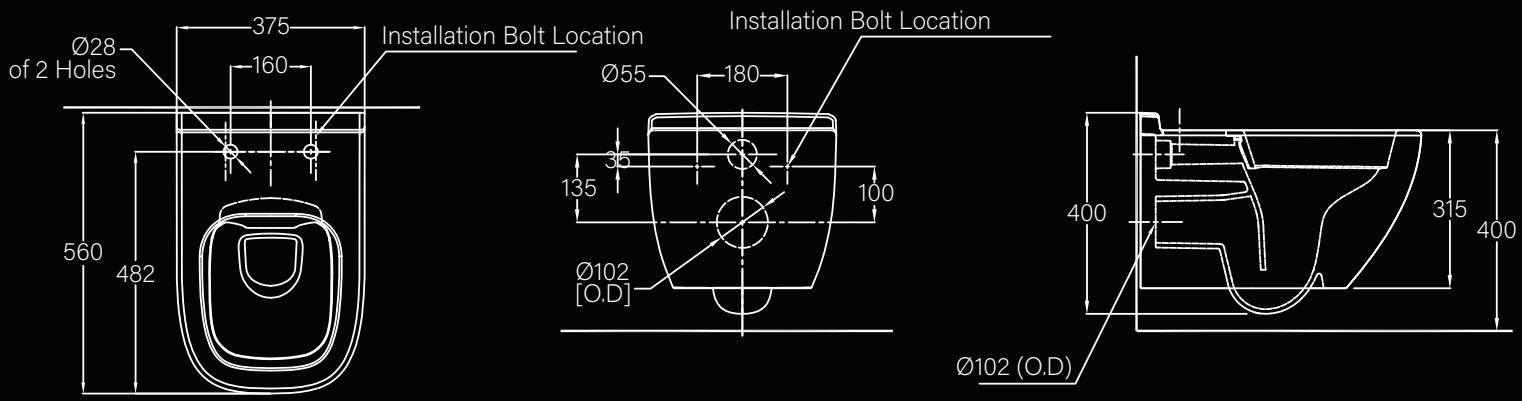

VICTORIA
121640265010020
WATER CLOSET