mediclinics

HOTEL BATHROOM ACCESORIES
STAINLESS STEEL

TOILET PAPER HOLDER
STAINLESS STEEL AISI 304 SATIN FINISH

Code: AI0113CS

General Description

- Toilet paper holder, stainless steel AISI 304, satin finish, for mounting on the wall.
- Suitable for the hotel sector, for fitting out the bathrooms in the hotel rooms.
- Model suitable for public use.
- With no removable components.
- It normally goes along with a stainless steel brush holder.

Components & Materials

- Stainless steel AISI 304 holder and snap flange cover, 0,8 mm thick, satin finish. Mounting on the flange by means of a keep pin.
- Stainless steel AISI 304 mounting flange, 1,6 mm thick. Mounting on the wall by means of two screws.
- Chromed plastic axis, vandal-proof. It incorporates a high resistant interior spring.

Technical Specifications

Dimensions	52 x 193 x 97 mm
Length between flanges' centres	141 mm
Snap flange covers	52 x 52 mm
Distance from the wall	97 mm

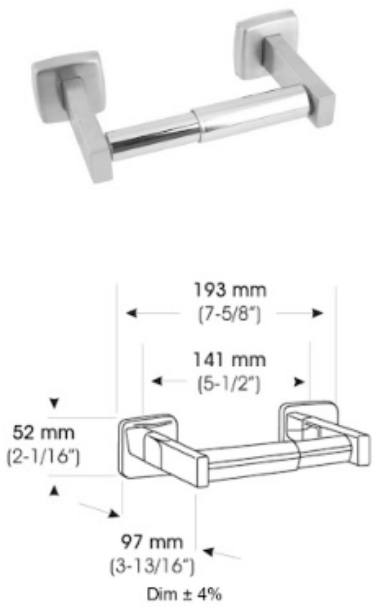

130230670405200

AI0113CS

Toilet Paper Roll Dispenser AISI 304 SS

علاقة مناديل حمام - موديل (AI0113CS)

Dimensions	52 x 193 x 97 mm
Length between flanges centers	141 mm
Distance from the wall	97 mm
Snap flange covers	52 x 52 mm