Specification Sheet

الخزف السعودي
Saudi Ceramics



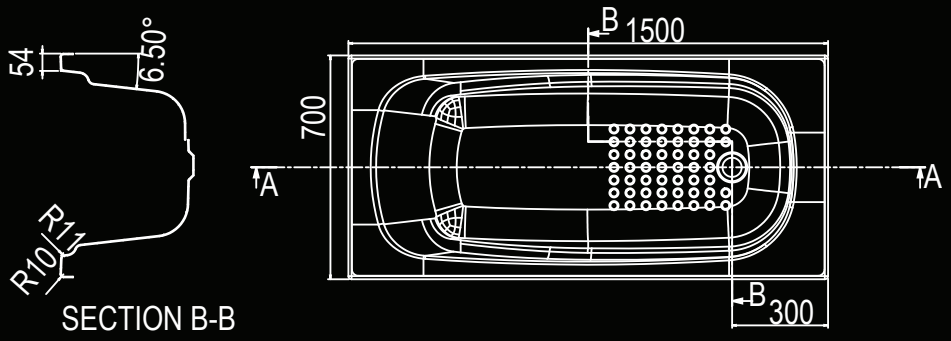

SECTION B-B

SECTION A-A

SCC BATHTUB
180511500101000
SALWA